TREADSAFE™
Industrial Anti-Slip Solutions

StairSAFE®
RungSAFE®
DeckSAFE®
CableSAFE®

Anti-Slip Product Guide

Global leaders in the Design and Supply
of Underfoot Industrial Anti-Slip Product Solutions

We are delighted to bring to you the latest collection of Treadwell Industrial Anti-Slip Products.

As you will notice, we are pleased to introduce many new products to the TREADSAFE™ range, including a brand new range of Treadwell Anti-Slip products. We have also expanded our product choice in the Nosing & Rung Cover ranges.

With warehouses and distribution centres throughout Australia, Treadwell Group and the brand names StairSAFE®, RungSAFE® and DeckSAFE® are the names you can rely on.

A BRIEF HISTORY

Treadwell Group is one of the most established names in the supply of Industrial Anti-Slip Solutions throughout Australia.

Our centrally located Adelaide fabrication facility, coupled with our second to none distribution network across Australia and our commitment to quality and testing, allows our technical staff to provide engineering and design assistance for any project.

With a broad history of installation in a wide range of challenging applications, including industrial process plants, mining applications, marine and costal environments as well as public infrastructure, Treadwell has the experience to help you specify the right resin systems and products every time.

If you have any unique design problems or would like to know more about incorporating our products in your design, chances are we've encountered something similar before. Get in contact today - Freecall 1800 246 800.

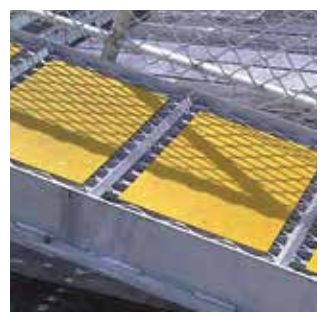

Treadwell Group Pty Ltd

Australia

P 1800 246 800
F 1300 763 521
sales@treadwellgroup.com.au
treadwellgroup.com.au

New Zealand

P 0800 246 600
F 0800 244 600
sales@treadwellgroup.co.nz
treadwellgroup.co.nz

2026.4

TREADSAFE™

Contents

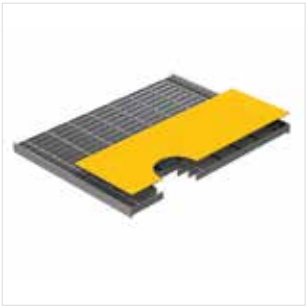

StairSAFE®
04 Anti-Slip Stair Nosing

RungSAFE®
08 Anti-Slip Ladder Rung Covers & Cappings

DeckSAFE®
10 Anti-Slip Deck Plating

CableSAFE®
12 Cable Covering

TREADSAFE™
13 Installation Methods

14 Ancillary Products

Quality Policy

Quality is at the forefront of Treadwell's working practices. With over 15 years of manufacturing to the highest quality standards, Treadwell Group prides itself on its implementation of strict quality control measures, and strives to supply products that surpass customers' expectations. The company works on a policy of continuous improvement.

Environmental Policy

Treadwell Group is conscious of the impact it has on the environment and its associated responsibilities. The company is committed to ensuring its operations satisfy both legal obligations and moral duties. Treadwell Group has been committed to sustainability for many years and is not just responding to current trends.

StairSAFE®

StairSAFE® conforms to AS/NZS 4586

StairSAFE® conforms to BS 7976-2202 +A1:2013

StairSAFE® conforms to BS 8300:2009 +A1:2010

SAF-SSC
StairSAFE Custom

EASY INSTALLATION

Heavy-duty industrial fixings for all applications. Surface for rungs normally applied by using a polyurethane adhesive glue system.

SAFETY

Heavy-duty grit layer provides an ideal anti-slip surface; likewise safety yellow offers enhanced visibility.

Industrial

Water and Waste Water

Maritime and Shipping

Oil and Gas

CALL 1800 246 800 | sales@treadwellgroup.com.au | treadwellgroup.com.au

OPTIONAL DEPTH AND LENGTH

Available in four standard depths, 50mm. 75mm, 100mm and 300mm. Custom depths are also available up to 300mm, Available in any length up to 3,250mm.

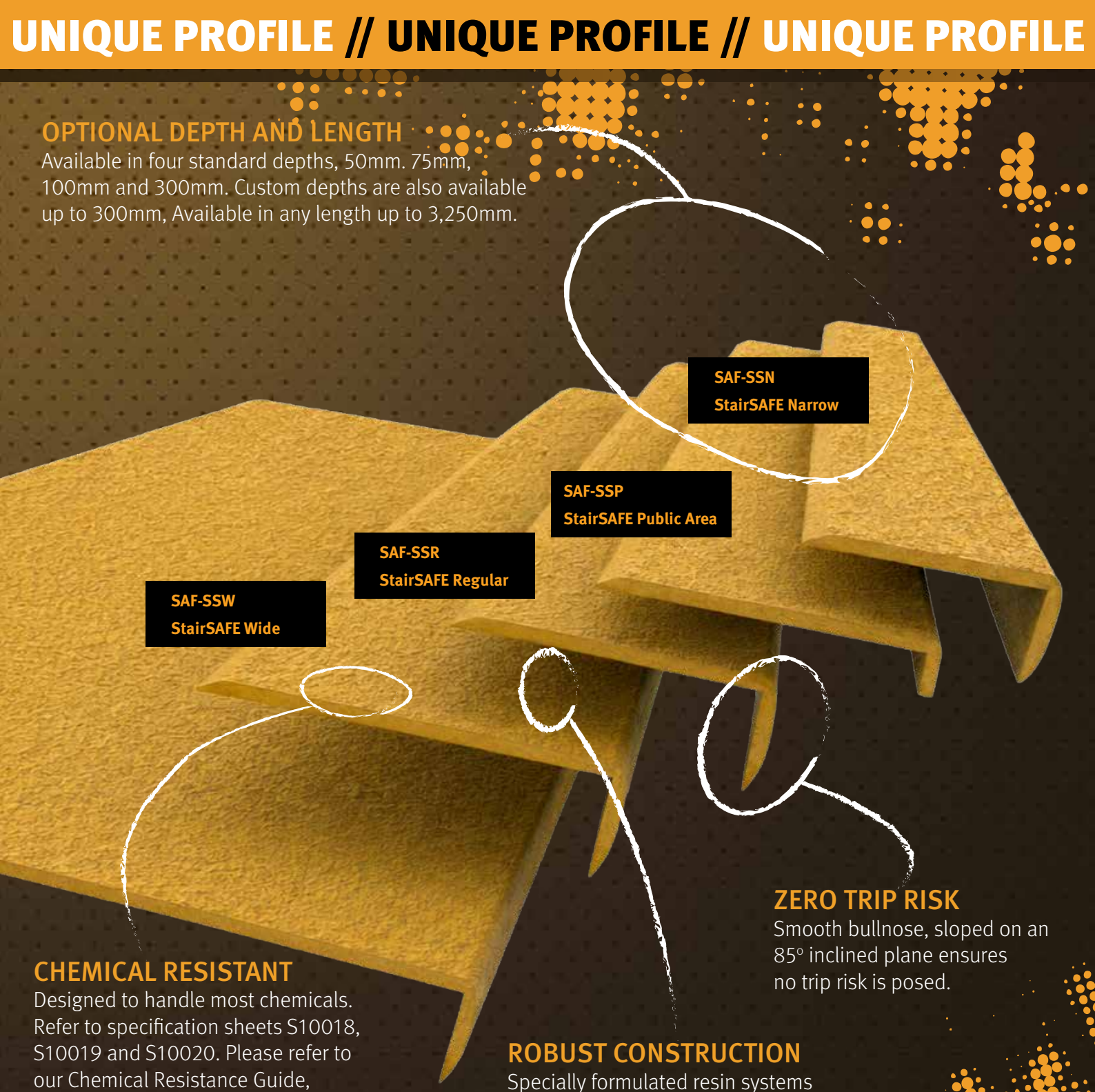

ZERO TRIP RISK

Smooth bullnose, sloped on an 85° inclined plane ensures no trip risk is posed.

CHEMICAL RESISTANT

Designed to handle most chemicals. Refer to specification sheets S10018, S10019 and S10020. Please refer to our Chemical Resistance Guide, CALL 1800 246 800 OR EMAIL sales@treadwellgroup.com.au for further details.

ROBUST CONSTRUCTION

Specially formulated resin systems and metallic available on request.

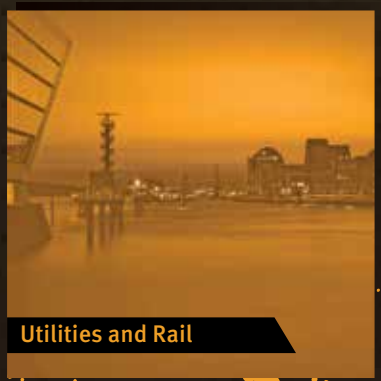

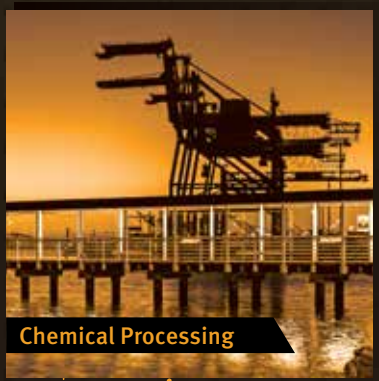

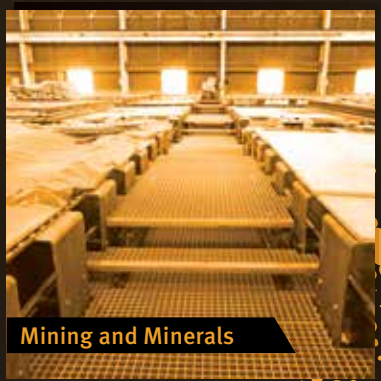

TREADSAFE™

Anti-Slip Stair Nosing

Long wearing, anti-corrosive, non-slip nosing designed to re-profile the leading edge of any step; perfect for corrosive applications

FEATURES

- Robust fibreglass FRP construction designed to withstand the harshest of conditions.
- Impregnated heavy duty grit surface provides a guarantee against delamination - a common problem with insecure metal backed alternatives.
- Remarkable resistance to chemicals makes StairSAFE® ideal for corrosive environments.
- Impregnated fire retardant additives ensure excellent fire and heat resistance - product conforms to ASTM E84.
- With a product that lasts up to five* times as long as metallic alternatives, StairSAFE® FRP nosing not only saves you in initial product cost but also in reduced installation time and cost.

SPECIFICATIONS

Length	StairSAFE® is available in any length up to 3250mm.
Colour	Standard colour, Safety Yellow, greatly enhances visibility - other colours are also available on request.
Applications	Shipping, Marine, Refining Chemical Industries, plus many more.
Depth	Standard depth: 50mm, 70mm, 75mm and 100mm. StairSAFE® is also available in any depth up to 300mm.

Types

SAF-SSW
StairSAFE® Wide
100mm Deep

SAF-SSR
StairSAFE® Regular
75mm Deep

SAF-SSN
StairSAFE® Narrow
50mm Deep

SAF-SSC
StairSAFE® Custom
Up to 300mm Depth

SAF-SSP
StairSAFE® Public Area
70mm Depth

Note: 70mm SAF-SSP is fully designed to comply with Australian Standard AS1428.1-2009.

*** Statistics based on in-situ tests carried out on StairSAFE® FRP nosing products in an ammonia production facility - Australia**

PRODUCT RATING

Grip	● ● ● ● ●
Safety	● ● ● ● ●
Chemical Resistance	● ● ● ● ●

CALL 1800 246 800 | sales@treadwellgroup.com.au | treadwellgroup.com.au

StairSAFE®

Anti-Slip Stair Nosing

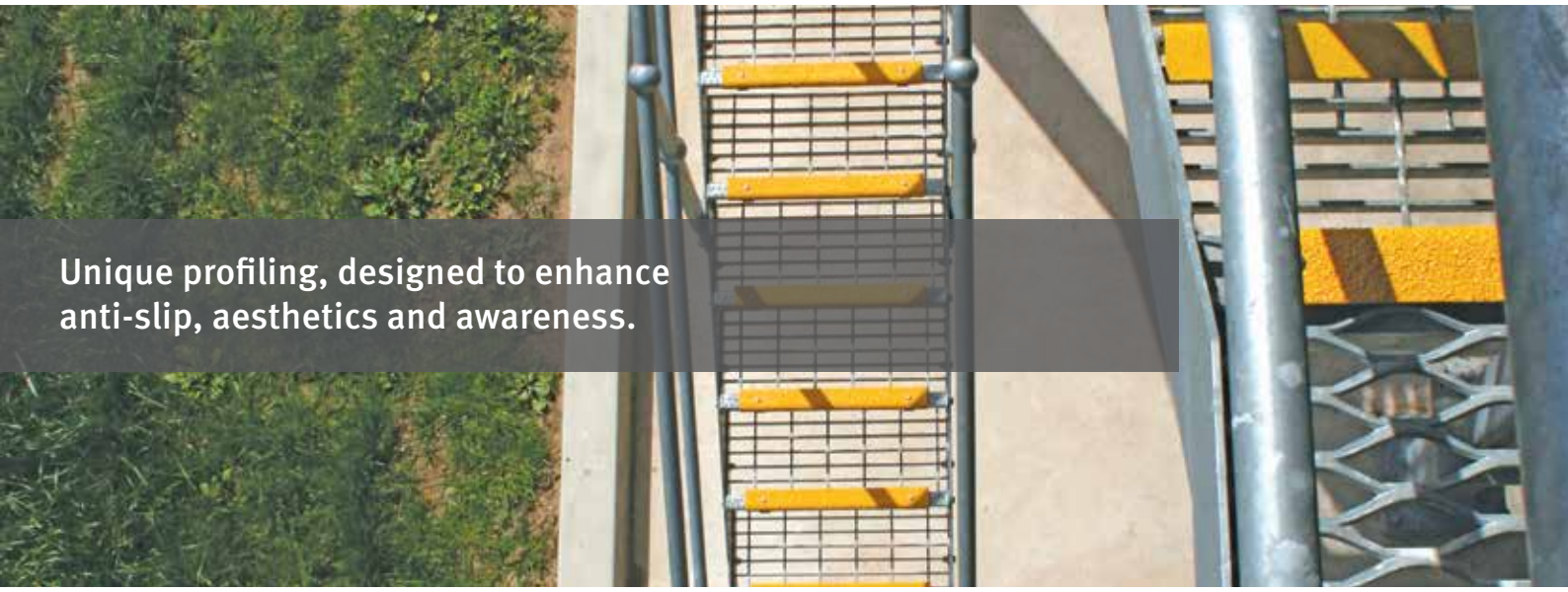

Unique profiling, designed to enhance anti-slip, aesthetics and awareness.

EASY STEP BY STEP PRODUCT ORDERING

		CODE	DESCRIPTION
Step 1	Select the required product	SAF-SSN	StairSAFE® Narrow Nosing (A=50mm)
		SAF-SSP	StairSAFE® Public Area Nosing (A=70mm)
		SAF-SSR	StairSAFE® Regular Nosing (A=75mm)
		SAF-SSW	StairSAFE® Wide Nosing (A=100mm)
		SAF-SSC	StairSAFE® Custom FRP Nosing (A=upto 300mm)
Note: Part 1 and Part 2 of the code are separated by a dash (-).			
Step 2	Select the required substrate	F	Fibreglass
		A	Aluminium
		S	Stainless Steel
Step 3	Select your surface colour	Y	Safety Yellow (standard)
		W	White
		B	Black Grey
		C	Custom
Step 4	Nominate your anti-slip grade	G2	Commercial Grade
		G3	Industrial Grade (standard)
		G4	Marine Grade
Step 5	Nominate the required length (B) in mm – available up to 3250mm in the description. If SAF-SSC has been selected as the product please ensure (A) is also specified, within the description.		
Step 6	Nominate any fixing points required, i.e. drilled holes. Specify desired location for ease of installation. Remember to order your correct fixing, **or CALL 1800 246 800 OR EMAIL sales@treadwellgroup.com.au** for technical advice from our sales team.		
Step 7	Remember to order your correct fixing, **CALL 1800 246 800 OR EMAIL sales@treadwellgroup.com.au** for technical advice from our sales team.		
Step 8	Specify your required quantity. Remember if you have an unusual or unique application, our nationwide area representatives are happy to visit your site, just **CALL 1800 246 800 OR EMAIL sales@treadwellgroup.com.au.**		

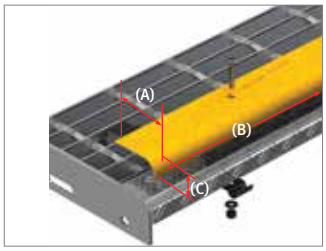

Example: SAF-SSW-FYG3, TREADSAFE™ StairSAFE® Wide Fibreglass Stair Nosing (100mm), Safety Yellow Industrial Grade (Grit) Anti-Slip Surface, 900mm length.
Note: All nosing to be drilled to suit Stainless Steel Clip Set, 100mm in from either end.

TREADSAFE™

Anti-Slip Rung Covers & Cappings

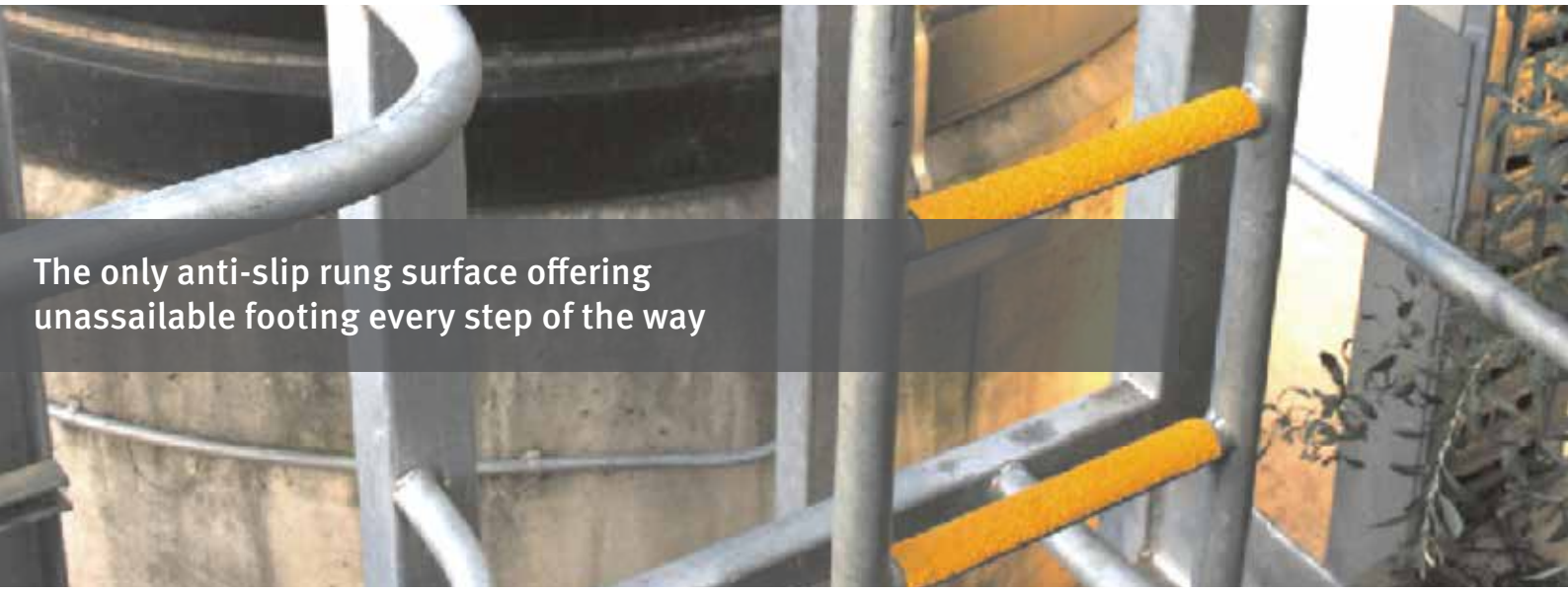

SQUARE CAPPINGS

- Abrasive grit surface eliminates the possibility of slips from access ladders - a possibility that is present only too often, and can have serious ramifications.
- Surface, whilst ideal for the negation of slip issues, has been developed so as not to damage bare hands. Perfect for every application.
- Chemicals, severe weather and corrosive mixtures will not adversely affect RungSAFE® performance or longevity.
- Accurate pre-drilling of fixing holes is available with all RungSAFE® rung covers and cappings making installation even easier for you.

SPECIFICATIONS

Substrate	RungSAFE® rung covers are available in both FRP and metallic substrates, stainless steel or aluminium.
Colour	Standard Safety Yellow colour ensures excellent visual highlighting. Enquire about custom colours which are also available.
Length	RungSAFE® is available in lengths up to 500mm long in metallic substrate or 3000mm long in FRP substrate.
Applications	Wine Production, Shipping, Truck Body Building, Water Treatment, Marine, Chemical and many more.

TYPES

SAF-RCO RungSAFE®
FRP Rung Covers

SAF-RCA RungSAFE®
FRP Rung Cappings

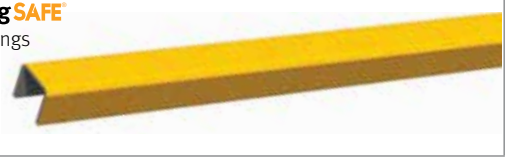

PRODUCT RATING

Grip	● ● ● ● ●
Safety	● ● ● ● ●
Wear	● ● ● ◐ ○

CALL 1800 246 800 | sales@treadwellgroup.com.au | treadwellgroup.com.au

RungSAFE®

Anti-Slip Rung Covers & Cappings

EASY STEP BY STEP PRODUCT ORDERING

Step 1	Select the required product	CODE	DESCRIPTION	
		SAF-RCO	RungSAFE® Cover	
		SAF-RCA	RungSAFE® Capping	
			Cover DIAMETER	**Capping SIZE**
Step 2	Please nominate your required dimensions	20	20.0mm	20.0mm x 20.0mm
		25	25.0mm	25.0mm x 25.0mm
		30	30.0mm	30.0mm x 30.0mm
		38	38.0mm	38.0mm x 38.0mm
		43	42.5mm	42.5mm x 42.5mm
Note: Part 2 and Part 3 of the code are separated by a dash (-)				
Step 3	Select the required substrate	F	Fibreglass	
		A	Aluminium	
		S	Stainless Steel	
Step 4	Select your surface colour	Y	Safety Yellow (standard)	
		C	Custom	
Step 5	Nominate your anti-slip grade	G2	Commercial Grade	
		G3	Industrial Grade (standard)	
		G4	Marine Grade	
Step 6	Nominate any fixing points required, e.g. drilled holes. Specify desired location for ease of installation. Remember to order your correct fixing, or **CALL 1800 246 800 OR EMAIL sales@treadwellgroup.com.au** for technical advice from our sales team.			
Step 7	Remember to order your correct fixing, **CALL 1800 246 800 OR EMAIL sales@treadwellgroup.com.au** for technical advice from our sales team.			
Step 8	Specify your required quantity. Please remember that if you have a unique application our nationwide area representatives are happy to visit your site, just **CALL 1800 246 800 OR EMAIL sales@treadwellgroup.com.au**			

Example: SAF-RCO25-FYG3, TREADSAFE™ RungSAFE® Fibreglass Rung Cover 25mm Diameter, Safety Yellow Industrial Grade (Grit) Anti-Slip Surface, 500mm length.

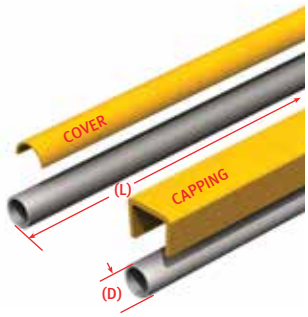

TREADSAFE™

Anti-Slip Deck Plating

FEATURES

- DeckSAFE® is designed to reduce the risk of slips, trips and falls especially in areas where the presence of liquids pose a safety concern.
- Optional (Marine) heavy duty abrasive grit eliminates tripping hazards in oily and wet conditions.
- DeckSAFE® can markedly enhance the safety rating of almost any application where employed.
- The enhancement of employee awareness can be taken one step further with integrated signage, meaning any symbol, letter or word can be added at your request.
- DeckSAFE® provides total peace of mind, for work health safety concerns.

SPECIFICATIONS

Colour	Standard colours available - Safety Yellow and Grey. Custom colours are available on request.
Thickness	3.2mm is the standard thickness for Fibreglass Deck Plating. Custom thickness is also available.
Grit	Available in Commercial, Industrial and Marine grade grit systems.
Applications	Mining, Chemical Industries, Refining, plus many more.

COLOUR OPTIONS

PRODUCT RATING

Grip	● ● ● ● ●
Safety	● ● ● ◐ ○
Chemical Resistance	● ● ● ● ●

CALL 1800 246 800 | sales@treadwellgroup.com.au | treadwellgroup.com.au

EASY STEP BY STEP PRODUCT ORDERING

Step 1	Select the required product	**CODE**	**DESCRIPTION**
		SAF-DSS	DeckSAFE® Deck Plating Standard
		SAF-DSC	DeckSAFE® Deck Plating Custom Thickness
Note: Part 1 and Part 2 of the code are separated by a dash (-).			
Step 2	Select the required substrate	F	Fibreglass
		A	Aluminium
		S	Stainless Steel
Step 3	Select your surface colour	Y	Safety Yellow (standard)
		C	Custom Colour
Step 4	Nominate your anti-slip grade	G2	Commercial Grade
		G3	Industrial Grade (standard)
		G4	Marine Grade
Step 5	Nominate required dimensions, (A x B) keeping in mind standard panels are available in 3000mm x 1200mm panels - sizes required larger than this will be supplied in several pieces. Should shapes be required, please provide Treadwell with a sketch, or feel free to contact us **CALL 1800 246 800 OR EMAIL sales@treadwellgroup.com.au.**		
Step 6	Nominate any fixing points required, e.g. drilled holes. Specify desired location for ease of installation.		
Step 7	Remember to order your correct fixing, **CALL 1800 246 800 OR EMAIL sales@treadwellgroup.com.au** for technical advice from our sales team.		
Step 8	Specify your required quantity. Remember if you have an unusual or unique application, our nationwide area representatives are happy to visit your site, just **CALL 1800 246 800 OR EMAIL sales@treadwellgroup.com.au.**		

Example: SAF-DSS-FYG3, TREADSAFE™ DeckSAFE® Fibreglass Deck Plating Standard, Safety Yellow Commercial Grade (Grit) Anti-Slip Surface, 1200mm x 3000mm.

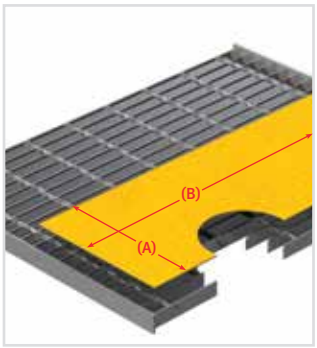

TREADSAFE™

Cable Covering

The FRP anti-slip solution for uncovered cables, pipes, conduit and wires.

FEATURES

- Creates a secure walkway over cables, pipes, conduits and wires..
- Offers a durable anti-slip surface for walking.
- Minimises risk of trips, slips and falls.
- Corrosion resistant.
- Interlocking cable protectors with PVC yellow top.

SPECIFICATIONS

Substrate	CableSAFE® is available in FRP substrates
Colour	Standard safety yellow ensures excellent visual highlighting. Ends can be customised as black or hazard
Length	CableSAFE® is available in lengths up to 3,250mm.
Applications	Wine Production, Shipping, Truck Body Building, Water Treatment, Marine, Chemical and many more.

PRODUCT RATING

Grip	●●●●●
Safety	●●●●●
Wear	●●●◐○

Special order only, lead time 6 to 8 weeks.

Installation Methods

What you will require to carry our installation:

MECHANICAL FASTENERS

- Appropriate PPE - safety glasses, gloves, dust mask and hearing protection are suggested
- Broom and dust pan or vacuum cleaner
- Tape measure or ruler
- Marking utensil (scriber or pin point permanent marker)
- Rag or cloth
- Variable speed drill with the appropriate sized tungsten carbide drill bits, which are recommended for FRP (Fiberglass) substrate products.
- All fasteners (screws) should feature low profile heads, such as pan heads supplied by Treadwell.

ADHESIVE

- Appropriate PPE - safety glasses, gloves, and dust masks are suggested
- Broom and dust pan or vacuum cleaner
- Tape measure or ruler
- Light grade sandpaper (or similar)
- Denatured alcohol or acetone
- Standard caulking gun used to apply adhesive
- Paint scraper
- Depending on the condition of the substrate (surface) a power washer, primer and grinder may be necessary

SURFACE PREPARATION

Prior to installing your TREADSAFE™ Anti-Slip products, surface preparation is necessary. The extent depends on the condition of the surface (substrate) you are covering, as well as the installation process you intend to use.

MECHANICAL FASTENERS

In most cases, simply sweeping the surface and removing loose debris is sucient. Here are some exceptions:

- Raised/Uneven Surfaces
  Depending on the severity (more than 4mm, levelling compound may be needed. Uneven surfaces can make fastening difficult (adhesive impossible) and can cause damage to the product over time.

- Chipped Concrete
  (particularly on leading edge of steps) – old and damaged concrete that is chipping away requires levelling compound. TREADSAFE™ Anti-Slip products are not load-bearing and must be fully supported. Gaps under the cover or unsupported areas will result in damage to the (FRP) fiberglass cover.

- Steel
  Remove existing screw heads.

APPLYING LADDER RUNG COVERS OVER CARBON STEEL

The following procedure should be carried out when LadderEX™ is installed:

Step 1	Thoroughly clean steel rungs to remove any dirt, oil, grease, etc.
Step 2	Abrade to remove any rust.
Step 3	Apply a metal primer followed by high quality industrial coating which does not contain silicone or Teflon.
Step 4	When the topcoat is dry or cured, scuff lightly with sandpaper to remove gloss.
Step 5	Adhesive such as TREADSAFE™ Polyurethane can now be applied.

TREADSAFE™

Ancillary products

Treadwell offers a range of ancillary product systems to complement the TREADSAFE™ range.

These adhesive sealent polyurethane product sealer kits are for ensuring that the integrity of grating that is trimmed is maintained and not impacted upon by the set-up of osmosis within the fibreglass part.

Contact Treadwell for more details and any unique application requirements, or should you require fabrication worksheets – free call 1800 246 800.

High Performance MSP Sealant and Adhesive

Polyurethane Adhesive Sealant, 290mL

Code	ADH-30610668W
UOM	Cartridge

This is a high performance, universal sealant and adhesive based on MSP (modified Silyl-Polymer) technology. It cures with the air of atmospheric humidity to form a durable elastic rubber. It is moisture and mould resistant, remains permanently elastic, has high mechanical resistance, end strength and absorbs acoustic and mechanical vibrations.

TREADSAFE™ FRP Sealer Kit

EX-Series® Sealer Resin Kit, include 500mL resin with 15mL catalyst

Code	CPX-EX-SK-500
UOM	Pail (+ Catalyst)

Ideal for sealing exposed fibres after any field cutting. These kits, which includes resin (standard 500g) and catalyst (standard 15 ml), are available in polyester and vinylester.

TREADSAFE™ Economy Clipset

Code	SAF-ECG
Material	Galvanized Steel
Code	SAF-ECS
Material	Stainless Steel

TREADSAFE™ Premium Clipset

Code	SAF-PCG
Material	Galvanized Steel
Code	SAF-PCS
Material	Stainless Steel

Our Commitment to Testing

Slip resistance and resistance to delamination are paramount with underfoot anti-slip products.

With this in mind, Treadwell has subjected TREADSAFE™ systems to stringent internationally accepted tests which have been carried out by NATA approved testing laboratories in Australia.

This test data allows plant operators and engineering personnel to review how the performance of our systems exceeds the high standards accepted.

NATA APPROVED

StairSAFE® conforms to AS/NZS 4586

StairSAFE® conforms to BS 7976-2202 +AI:2013

StairSAFE® conforms to BS 8300:2009 +AI:2010

CALL 1800 246 800 | sales@treadwellgroup.com.au | treadwellgroup.com.au

Notes

CALL 1800 246 800 | sales@treadwellgroup.com.au | treadwellgroup.com.au

PROCEED ON
TO WEIGHBRIDGE
ONLY WHEN SIGNAL
IS GREEN

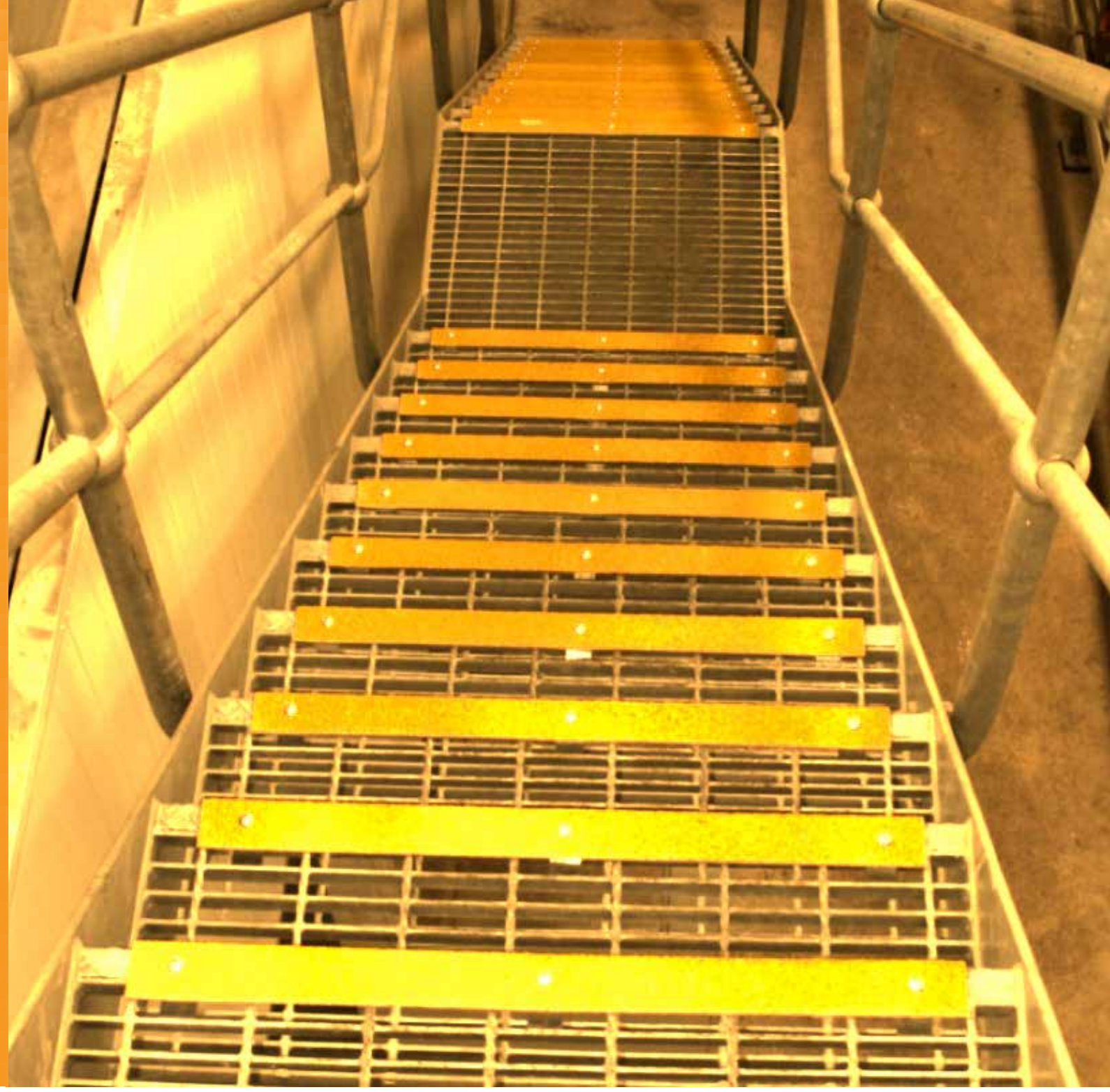

TREADWELL™

Treadwell brands mentioned in this document are all registered brands of Treadwell Group Pty Ltd. All pictures and information are supplied as a guide only. The complete range of Treadwell products are developed, refined, made to meet and exceed stringent specifications for the worldwide market.

Important Note: Sales of products are subject to our Terms and Conditions which are available upon request. All specifications and photos are a guide only and are subject to change without notice. Please ring to confirm details. Treadwell products stated only comply with relevant standards mentioned within this publication when installed and used as they are designed to be.

2026.4